FULL MOTION INDOOR/OUTDOOR MOUNT

RV250G

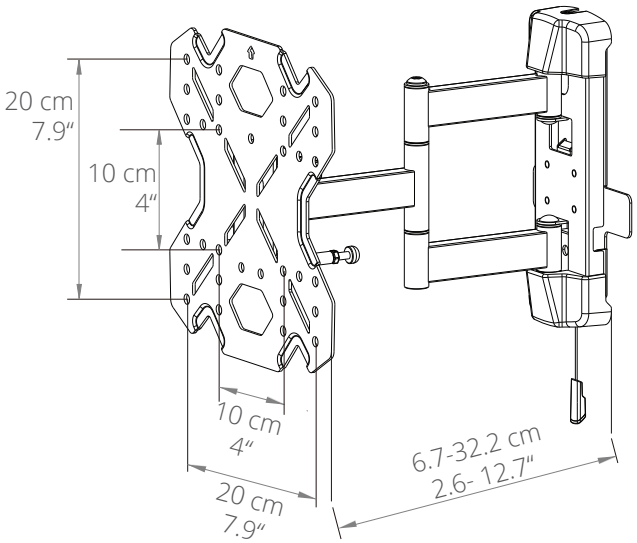

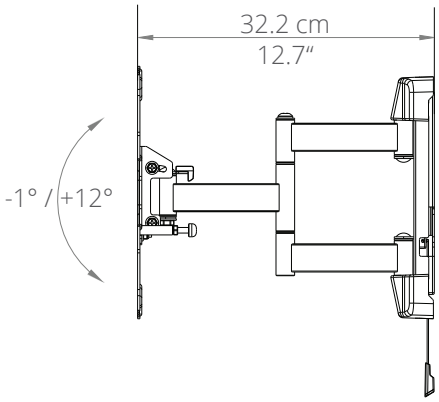

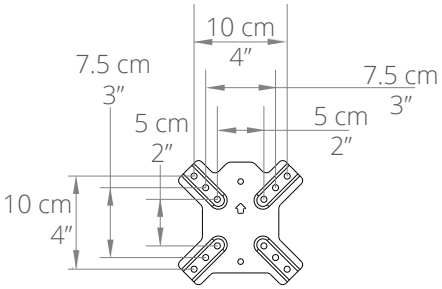

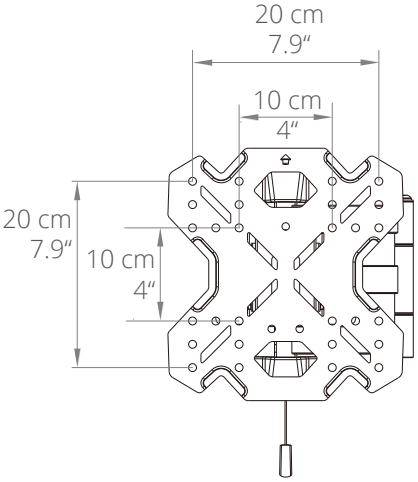

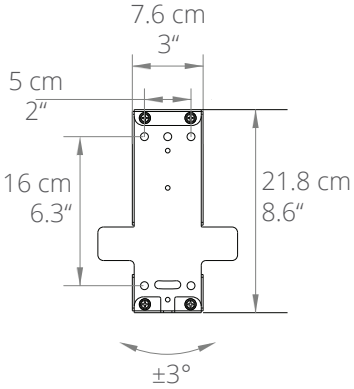

kanto
kantomounts.com