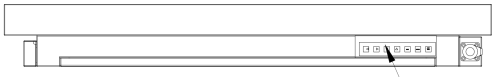

Keypad

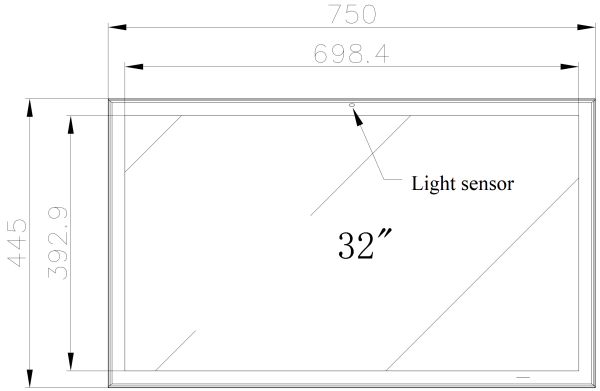

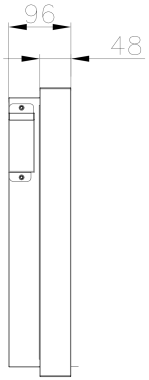

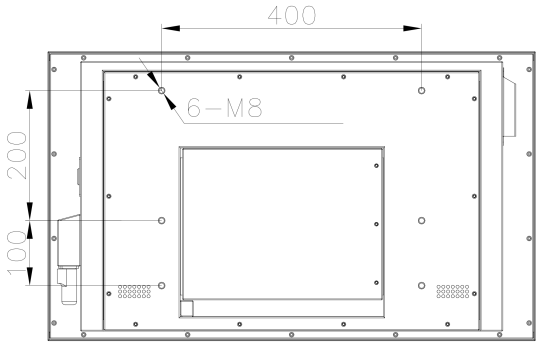

Power switch
Waterproof power connector

XXX ±56	X.°± 0.050	
XXX ±28	.X°± 0.010	
XX ± .2	.XX°± 0.005	
X ± .14	.XXX°± 0.002	

2024. 03. 15

Q'TY	UNIT	SCALE	SHEET	REV.
–	MM	1:1	1/1	A